Jouplast®

DIRECTIONS FOR USE

USING ADJUSTABLE RISER PEDESTALS TO CREATE A NATURAL TIMBER OR COMPOSITE DECK

TMP CONVERT

10 WARRANTY YEARS

www.jouplast.com

100% recycled

MADE IN FRANCE · FABRIQUÉ EN FRANCE

RECOMMENDATIONS

To prevent any accumulation of water, extend the life of decked terraces and minimise any distortion of the decking boards (cupping, cracking, etc.), we advise:

1. Doubling up on joists where boards meet to facilitate effective drainage of water.
2. Applying joist protection tape to the tops of joists.
3. Preventing direct continuous contact between decking boards and joists by inserting ventilation spacers at least 3 mm thick.
4. Ensuring good ventilation of the space beneath the decking by leaving at least 100 mm between the ground and the underside of the joists.
5. Using decking boards with drainage grooves on the underside and a sloping or curved profile on the top face.

WARNING, WHEN USING RISER PEDESTALS, THE SUB-FRAME MUST BE CONSTRUCTED USING WOODEN OR METALLIC JOISTS ONLY (NOT COMPOSITE).

› GENERAL RULES RELATING TO THE WOODEN FRAME

Leave a gap between the floor and the decking

Wooden flooring* must be raised off the ground to ensure that the frame is well ventilated. Use polymer shims or risers to lift the frame off the ground.

Different types of joists can be used:

Single joisting

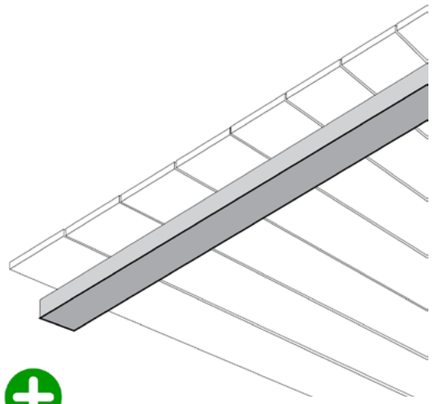

- Lower cost.
- Minimal height required beneath the direct surface.
- Ensures constant centre-to-centre spacing of joists.
- Easy installation.

Cross joisting

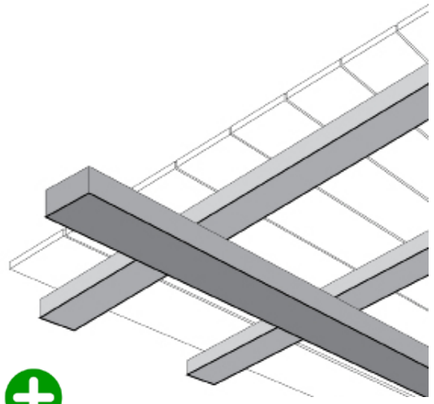

- Improves ventilation beneath the finished decking.
- Enables the creation of a self-supporting structure by distributing stresses more evenly across the surface.
- Easy installation.
- Ensures uniform structural stability over time.

** WOODEN FLOORING : Exterior floor surface consisting of boards with joists fixed to frames with stabilised foundations (risers, shims, beams, etc.).*

DIRECTIONS FOR USE

Double joisting

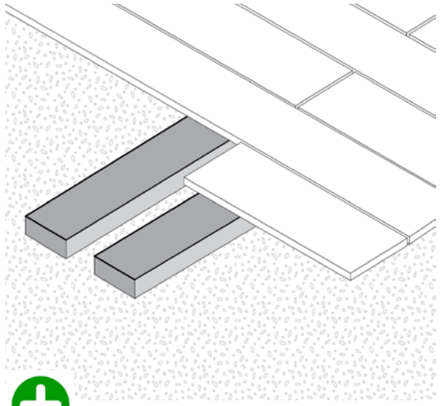

- Improves water flow by reducing potential stagnation points.
- Enables the use of joists less than 60 mm wide.

Double cross joisting

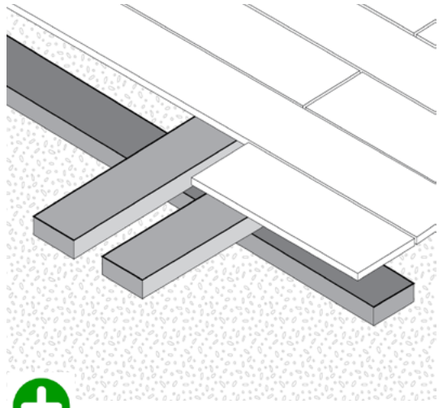

- Combines the advantages of cross joisting and double joisting.

› DIRECTION OF LAYING

For reasons of appearance, decking boards should be laid parallel to the wall that contains the doorway providing access to the terrace.

› ON A CONCRETE BASE OR ONTO THE GROUND, A SLIGHT INCLINE OF 1% IS RECOMMENDED FOR DRAINAGE.

THE GROUND MUST NOT ACT AS A WATER RETENTION AREA.

WHY DOES THE GROUND SURFACE NEED TO BE PREPARED FOR BUILDING A TERRACE ON RISER PEDESTALS?

The surface on which the terrace will be built must be prepared before work can begin.Unprepared ground (e.g. unprepared soil or lawn) may change over time and can be subject to movement, depending on the weight it is required to bear and the weather conditions to which it will be subject (dry periods, heavy rainfall, etc.). For these reasons, it is important to stabilise the ground beneath the terrace to ensure its long-term stability.

› CHOOSE THE RIGHT DECKING BOARDS

Board slenderness ratio*

The slenderness coefficient is calculated as the ratio between the width (w) of the joist and its depth (d), i.e. w ÷ d. The higher the slenderness coefficient, the greater the risk of the joist warping*. We therefore recommend a slenderness coefficient of between 4 and 6, depending on the type of timber used.

Board quality

Any idiosyncrasies noted on the boards could have negative consequences. Check for buckled, warped or curled boards, or boards with an irregular pattern in the wood fibre.

** BRACE : A piece of wood placed between the joists to strengthen the frame.*
** BOARD WARPING : Warping is the action of bending and twisting. When a wooden board warps, it becomes deformed along its entire length.*
**** SLENDERNESS RATIO:** Ratio between the thickness and width of the board.*

Drying the boards

Ensure that the board drying techniques used meet the requirements for the selected species.
AD: Air drying for naturally stable wood (e.g. IPE exotic wood).
KD: Kiln drying for wood requiring a more controlled drying environment.
We also recommend that the moisture content of the timber decking boards should be between 18% and 22% at the time of installation, otherwise there is a risk that the installation will degrade.

THIS MUST BE VERIFIED WITH THE WOOD DISTRIBUTOR

› MAINTAINING THE WOODEN DECKING

Over time, the decking boards may turn slightly grey. This is a natural phenomenon whereby a thin surface layer oxidises due to UV rays and bad weather. This grey layer can be removed with a wood brightener and brush. You can also apply a saturation oil in the same colour as the wood species.

› CHOOSING THE RIGHT WOODEN FRAME

The quality of the wood used for the frame is as important, perhaps even more so, than that used for the boards.
You must use joists made from the same or better quality wood than that used for the decking boards.

BEFORE STARTING

Before starting work, it's important - essential even - to prepare a joint layout plan* clearly showing:

› the cuts.
› **the spacing between joist centrelines.**
› **the quantity of accessories required :** riser pedestal, decking cover tape, shims...
› Installation with or without adjoining boards.
› **Edge finishes must be considered and planned before the start of installation.**
› Make sure you don't have to cut the deck boards lengthways.

Minimal tools required

- A screwdriver.
- A level.
- A saw (jugsaw, circular saw)
- Wood drill with stop
- Screw for decking board (countersink with depth stop)

Advices from the Pros

Also recommended
- Screed tool
- Chalk or line marking spray
- Joist hanger
- A vibrating plate
- Stainless steel fasteners

Safety first!
Use protective glasses and safety gloves

** **LAYOUT PLAN:** the plan to follow when laying the decking.*

DIRECTIONS FOR USE

1 DEFINE THE AREA

› Firstly, define the area for the installation of the terrace.
› Before starting work, it is important - essential even - to prepare a joint layout plan clearly showing: the direction of laying, cuts, number of riser pedestals, edge finishing, etc.

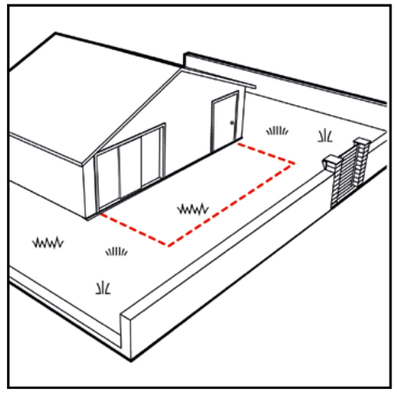

2 SITE PREPARATION

› Work on a clean and stabilised ground.

2 possibilities:

Onto the ground:
› Excavate 15 cm of soil.

› Lay a geotextile on the subbase.

› Lay a base layer of 0/31.5 grade aggregate.

› Compact with a vibrating plate.

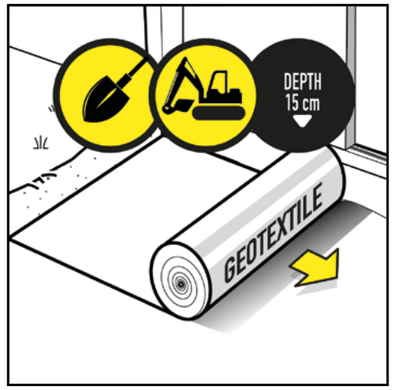

Click on the QR CODE or scan it and you will be redirected to the video.

NB :
› Depending on the nature of the soil, a draining foundation layer can be laid upstream by depositing a layer of 30/60 or 40/80 crushed stone.

› If the resulting surface is still uneven, we recommend laying a bed of quarry sand or 0/4 crushed sand. This will made it easier to install low riser pedestals.
› We recommend using the vibrating plate compactor between each layer.

On a concrete base

› Remove any debris, stones, etc. that could make it more difficult to position and stabilise the riser pedestals.
› Check the available heights at the door or window sills.
› Allow a minimum of 8 cm and 1 cm additional if using the invisible fixing system FIXEGO®.

› Riser pedestal (min. height 20 mm) + joist + decking board = 8 cm
› Check if the concrete base is in good conditions and check the slope.

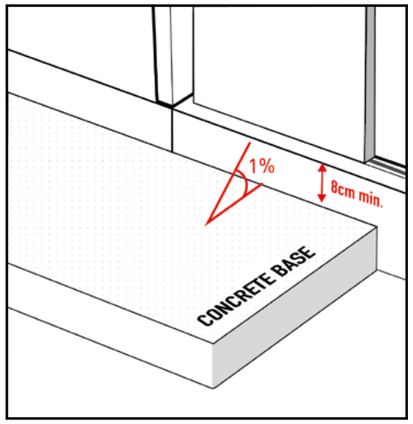

3 RISER POSITION

› Lay directly the riser onto the surface according to the recommended spacing.

- 70 cm between each riser (according wood essence type). and the section of the joists.

- A distance of 50 cm between the timber joists.

- Ensure a 40 cm centreline spacing between joists where composite boards are used.

› Lay the joists on previously assembled riser pedestals

› Always check with your timber supplier.

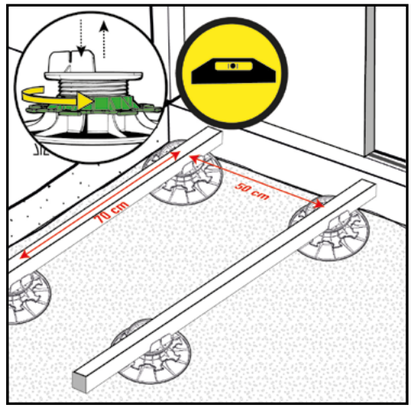

4 FIX THE TIMBER TO PEDESTAL

› Screw through into the beam using 1 screw per pedestal.

NB :
› The notch in the tab marks the central point at which 2 joists should be butt jointed.

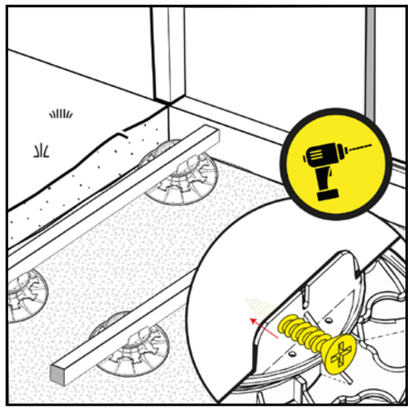

DIRECTIONS FOR USE

5 HEIGHT ADJUSTMENT

› Use the nut on the pedestal to simply adjust to desired height starting with the riser pedestal situated at each end.

Check the level, then adjust the intermediate riser pedestals.

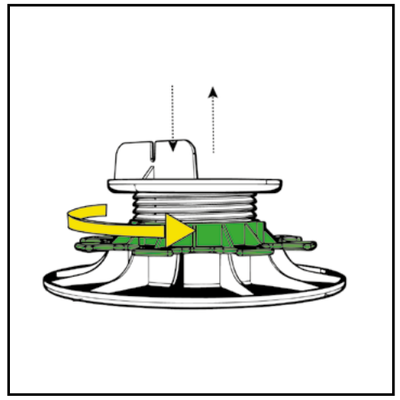

6 DECKING PROTECTION

› Apply the decking cover tape on the timber joists to prevent from moisture and from run-off water. Ensure that you wrap the tape carefully over the edges of the joist.

› We recommend protecting the top face of the joist using bituminous joist protection tape.

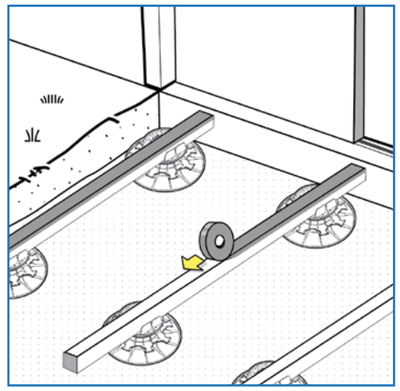

7 DECKING LAYING

› Leave a 5 mm gap between the wall and the start of the decked terrace.
› Use a spacer to leave a gap of at least 5 mm between decking boards (this gap may differ depending on the humidity level).
Fix the decking boards in place using:
- either screws directly through the boards,
- or FIXEGO® secret fixings (available in the Jouplast® range),
- or the fixing clips supplied with composite timber decking boards.

› Choosing the right type of decking board is the best way of ensuring a long life for your finished decked terrace (see the paragraph on "Choosing the right decking boards").

› Screw at least 15 mm from the edge of the board (a).
› This distance increases to 17 mm at each end of the board (b).

› We recommend pre-drilling.

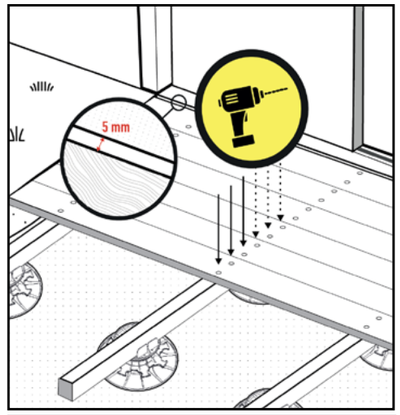

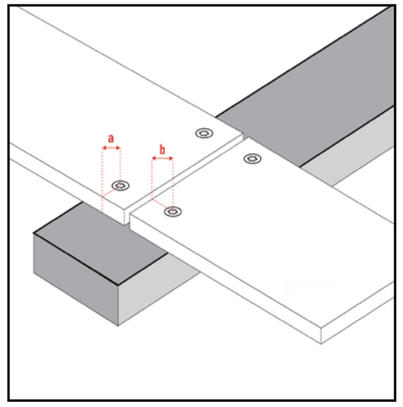

› To ensure good ventilation of the finished structure, a plastic shim (minimum 3 mm, although we recommend 5 mm) can be inserted between each decking board and its supporting joist.
If you use FIXEGO® invisible fixing system, it is not necessary to use plastic shim for ventilation.

Insert the shims progressively as you lay the decking boards. (see diagram)

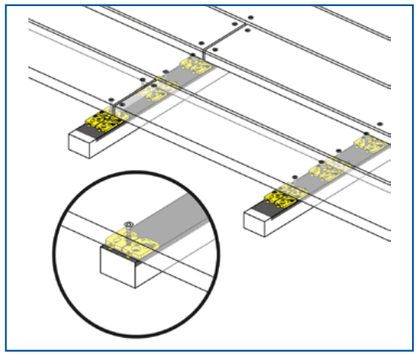

› We recommend doubling up on joists where boards meet to facilitate effective drainage of water.

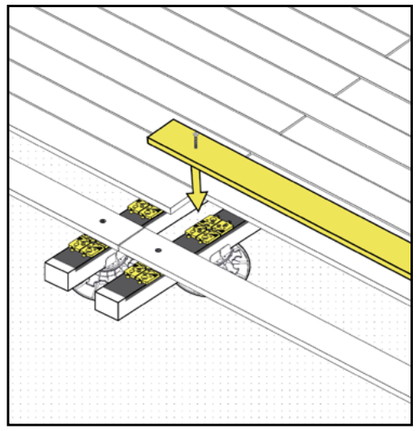

8 TERRACE FINISHING

AT THE END OF THE JOIST

› Place the lateral riser support on the riser basis.

› Lay and fix the timbers as shown in the diagram.

a) Position a vertical joist against the lateral riser support and the horizontal joist.

b) Screw the vertical joist in place as shown in the diagram opposite.

Optional: PU adhesive can be applied to the glue traps on the tab of the edge trim support.

› Fix the fascia board to the joist using 2 screws.

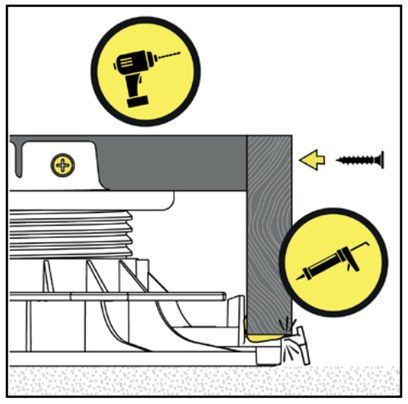

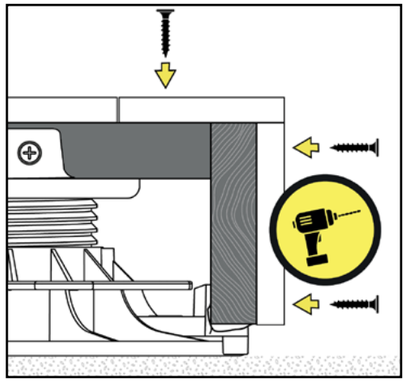

ALONG THE JOIST

› We recommend an overhang of less than 3 times the thickness of the decking board to avoid any distortion of the deck edge boards.

Where a side overhang more than 3 times the thickness of the boards is unavoidable, you have 2 options:

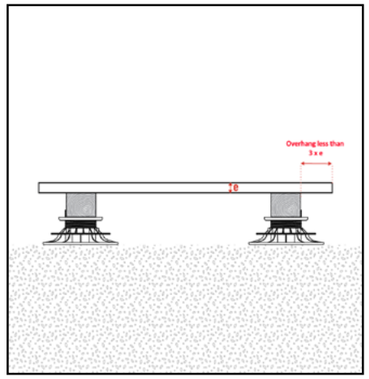

OPTION 1 - CREATE A 'LADDER' EDGE STRUCTURE

› Along the edge of the decked terrace, fit one lateral riser support to each riser pedestal and break off the tab.

› Position vertical reinforcements around the edge (see diagram) to allow riser pedestal movement.

› Position a small vertical joist of the measured height against each lateral riser support.

› Fix the fascia board to the joist using 2 screws.

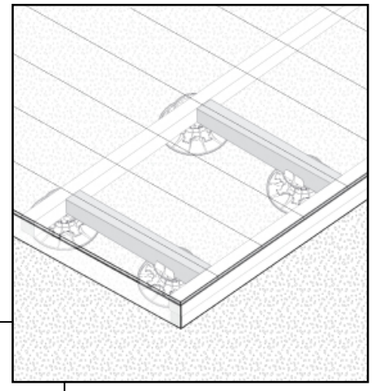

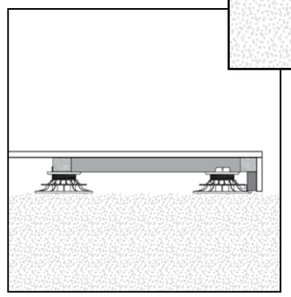

OPTION 2 - ADD A PERIPHERAL JOIST

› Along the edge of the decked terrace, fit one lateral riser support to each riser pedestal and break off the tab.

› Position a small joist vertically against each lateral riser support.

› Fix a spacer between the two peripheral joists to secure them together.

› Fix the fascia board to the joist using 2 screws.